NOBEL METAL THERMOCOUPLES

Nobel Metal Thermocouple, Ceramic Protection Tube & Terminal Block Assembly

Model Code: T5

Operating Temperature:
+1000 C Max.

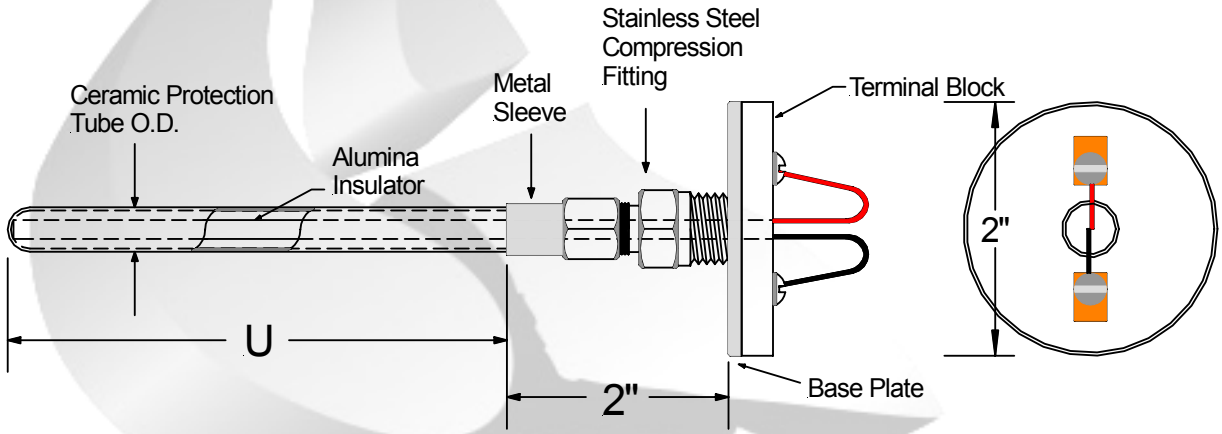

Model: **T5** A B C — D E — F

A	Ceramic Tube Size
1	1/4" O.D.
2	3/8" O.D.

B	Protection Tube
A	Alumina 1800C Max.
B	Mullite 1600C Max.

C	"U" Dimension
Specify " U " Length In Inches	0 6

Example "U" is 6" = 06

D	Calibration		
	Standard Limits of Error		Special Limits of Error
A	S	D	S
B	R	E	R
C	B	F	B

E	Wire Size	
Gage	Single	Dual
20	1	5
24	2	6
26	3	7
28	4	8

F	Terminal Block Description
A	Ceramic
B	Ceramic, Spring Loaded
C	Plastic, 1" Dia. Micro Head Size

Nordic Sensors Ind. Inc. Tel: 1-888-667-3421 & Fax: 1-888-867-9986.