INDUSTRIAL THERMOCOUPLES

Base Metal Thermocouple, Ceramic Protection Tube & Terminal Block Assembly

Model Code: S2

Operating Temperature:
+1000 C Max.

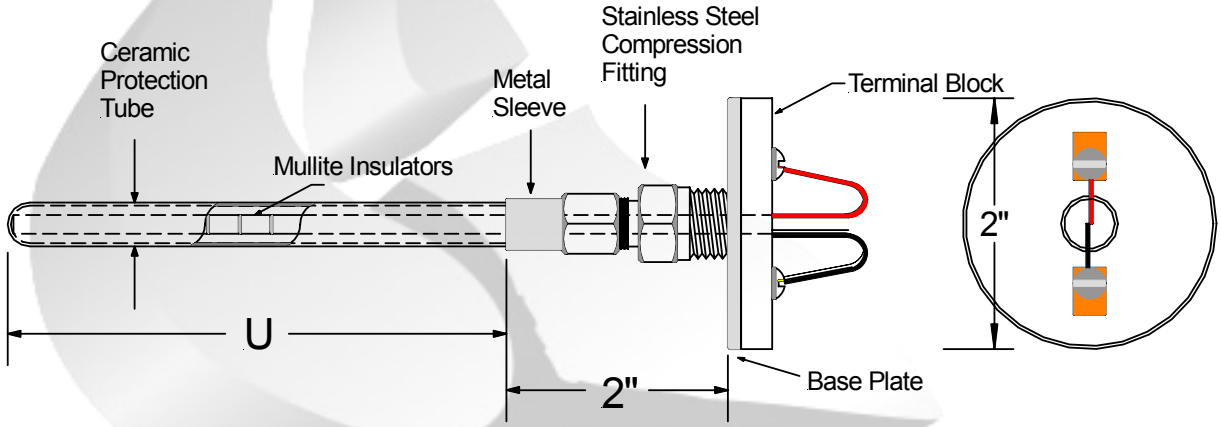

Model: **S2** [A] [B] [C] — [D] [E] — [F]

A	Ceramic Tube Size
A	1/4" O.D.
B	3/8" O.D.

B	Protection Tube
1	Alumina 1800C Max.
2	Mullite 1600C Max.

C	"U" Dimension
Specify " U " Length In Inches	0 6

Example "U" is 6" = 06

D	Calibration		
Standard Limits of Error		Special Limits of Error	
A	J	C	J
B	K	D	K

E	Wire Size	
Gage	Single	Dual
20	1	4
24	2	5

F	Terminal Block Description
A	Ceramic
B	Ceramic, Spring Loaded
C	Plastic, 1" Dia. Micro Head Size

Nordic Sensors Ind. Inc. Tel: 1-888-667-3421 & Fax: 1-888-867-9986.